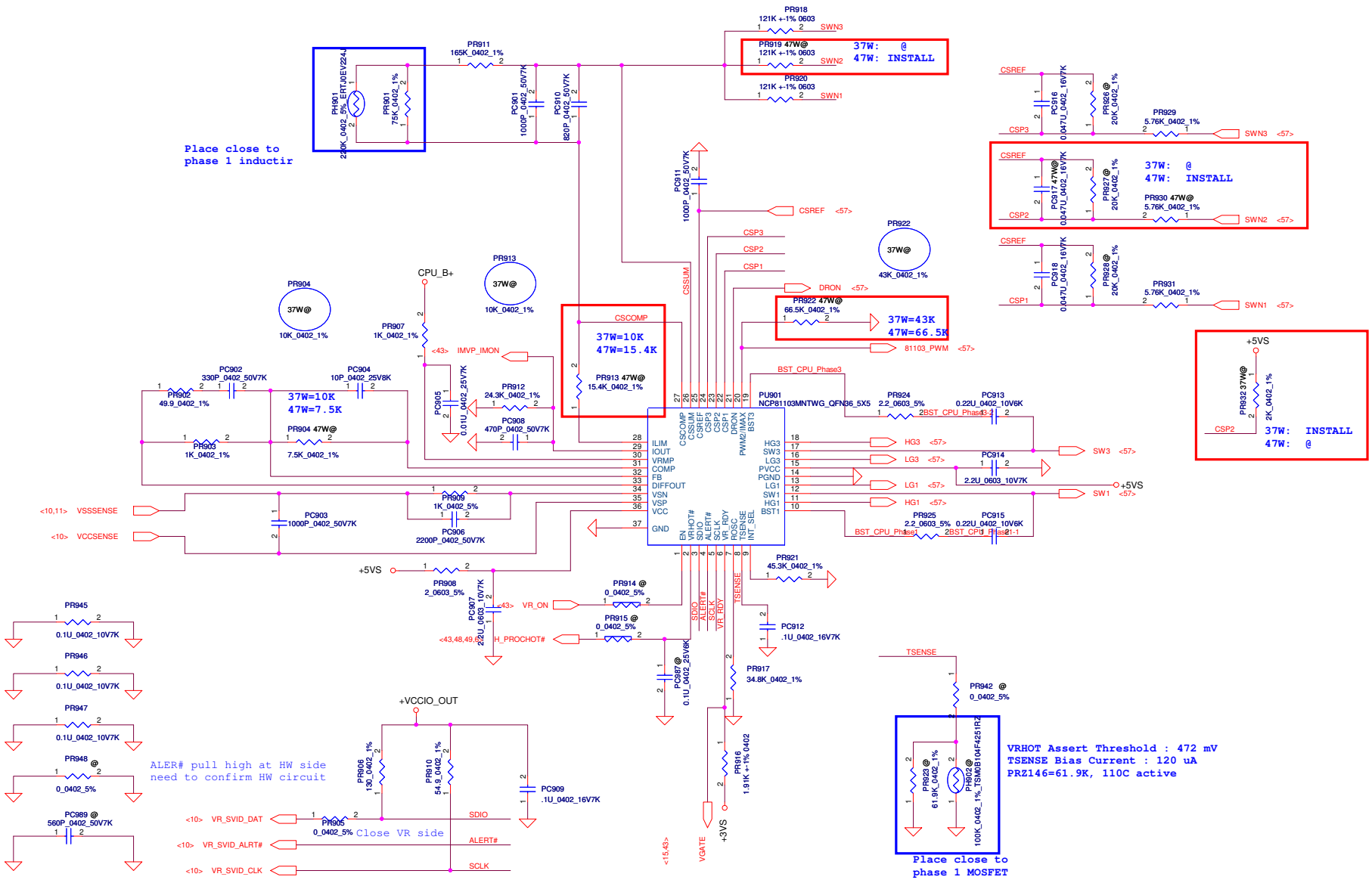
Place close to
phase 1 inductir
PH901
240K_0402_5%_ERT10EV224J
PR901
75K_0402_1%
PR911
165K_0402_1%
PC901
1000P_0402_50V7K
PC910
820P_0402_50V7K
PR918
121K +-1% 0603
SWN3
PR919 47W@
121K +-1% 0603
SWN2
PR920
121K +-1% 0603
SWN1
37W: @
47W: INSTALL
CSREF
PC916
0.047U_0402_16V7K
PR926 @
20K_0402_1%
PR929
5.76K_0402_1%
SWN3 <57>
CSP3
PC917 47W@
PR927 @
PR930 47W@
5.76K_0402_1%
SWN2 <57>
CSP2
PC918
PR928 @
PR931
5.76K_0402_1%
SWN1 <57>
CSP1
PC911
1000P_0402_50V7K
CSREF <57>
CSP3
CSP2
CSP1
DRON <57>
PR922
37W@
43K_0402_1%
PR922 47W@
66.5K_0402_1%
37W=43K
47W=66.5K
81103_PWM <57>
CSSUM
CSCOMP
37W=10K
47W=15.4K
PR913 47W@
15.4K_0402_1%
PR913
37W@
10K_0402_1%
PR904
37W@
10K_0402_1%
CPU_B+
PR907
1K_0402_1%
<43> IMVP_IMON
PC905
0.01U_0402_25V7K
PR912
24.3K_0402_1%
PC908
470P_0402_50V7K
PC902
330P_0402_50V7K
PC904
10P_0402_25V8K
PR902
49.9_0402_1%
37W=10K
47W=7.5K
PR904 47W@
7.5K_0402_1%
PR903
1K_0402_1%
BST_CPU_Phase3
PU901
NCP81103MNTWG_QFN36_5X5
PR924
2.2_0603_5%
PC913
0.22U_0402_10V6K
BST_CPU_Phase3
ILIM
IOUT
VRMP
COMP
FB
DIFFOUT
VSN
VSP
VCC
GND
CSCOMP
CSSUM
CSREF
CSP3
CSP2
CSP1
DRON
PWM2/IMAX
BST3
HG3
SW3
LG3
PVCC
PGND
LG1
SW1
HG1
BST1
HG3 <57>
LG3 <57>
LG1 <57>
HG1 <57>
SW3 <57>
SW1 <57>
PC914
2.2U_0603_10V7K
+5VS
PR925
2.2_0603_5%
PC915
0.22U_0402_10V6K
BST_CPU_Phase1
BST_CPU_Phase1
<10,11> VSSSENSE
<10> VCCSENSE
PR909
1K_0402_5%
PC903
1000P_0402_50V7K
PC906
2200P_0402_50V7K
EN
VR_HOT#
SDIO
ALERT#
SCLK
VR_RDY
RSSC
TSENSE
INT_SEL
PR921
45.3K_0402_1%
+5VS
PR908
2_0603_5%
PC907
2X2U_0603_10V7K
<43> VR_ON
PR914 @
0_0402_5%
<43,48,49,50> H_PROCHOT#
PR915 @
0_0402_5%
PC912
.1U_0402_16V7K
PC987 @
0.1U_0402_25V6K
PR917
34.8K_0402_1%
PR916
1.91K +-1% 0402
<15,43>
VGATE
+3VS
PR945
0.1U_0402_10V7K
PR946
0.1U_0402_10V7K
PR947
0.1U_0402_10V7K
PR948 @
0_0402_5%
PC989 @
560P_0402_50V7K
+VCCIO_OUT
PR906
130_0402_1%
PR910
54.9_0402_1%
PC909
.1U_0402_16V7K
ALER# pull high at HW side
need to confirm HW circuit
<10> VR_SVID_DAT
PR905
0_0402_5%
Close VR side
SDIO
<10> VR_SVID_ALRT#
ALERT#
<10> VR_SVID_CLK
SCLK
TSENSE
PR942 @
0_0402_5%
PR923
61.9K_0402_1%
PH902 @
100K_0402_1%_TSMB104F4251R2
VRHOT Assert Threshold : 472 mV
TSENSE Bias Current : 120 uA
PRZ146=61.9K, 110C active
Place close to
phase 1 MOSFET
+5VS
PR932 37W@
2K_0402_1%
CSP2
37W: INSTALL
47W: @